MERALED
LIGHTING FOR LUXURY

MON SERIES

MOONLIGHT MINI



DIMENSIONS

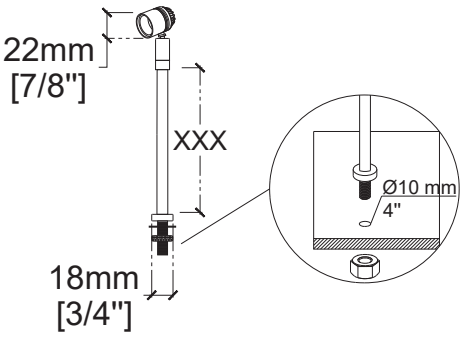

3W POWER

420 LUMEN OUTPUT

5 YEARS WARRANTY

TECHNICAL DATA

Body Material	Aluminium
Dimensions	Ø22 mm
Cut Out	Ø10 mm
Product Height	H: Any required length
Weight	0.25kg

Led Chip Brand	CREE-USA
CRI (Color Rendering Index)	CRI > 80-90
Warranty	5 Years
IP (Ingress Protection)	IP20
Control Option	On/Off - Dimmable (0–10V / 1–10V) - DALI

BODY FINISH

WHT BLK CHR BRS GLD RAL

BEAM ANGLE

10° 25° 40° 60° 120°

COLOR TEMPERATURE



3000K 3000/4000K 4000K 3000/6500K 6500/4000K 5000K 6500K

IP 20