MERALED
LIGHTING FOR LUXURY

FOCUS SERIES

FOCUSLIGHT



DIMENSIONS

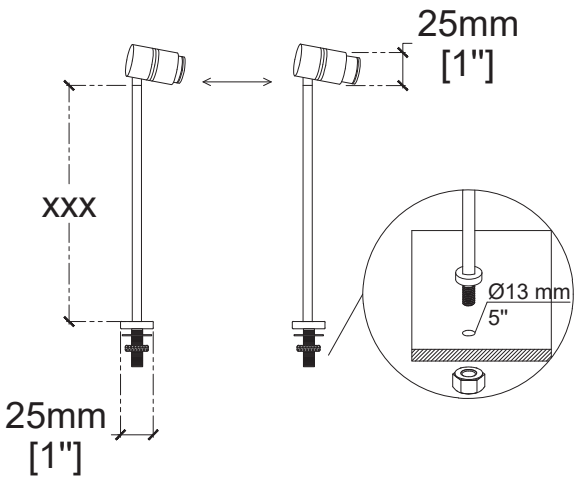

5W POWER

675 LUMEN OUTPUT

5 YEARS WARRANTY

TECHNICAL DATA

Body Material	Aluminium
Dimensions	Ø25 mm
Cut Out	Ø13 mm
Product Height	H: Any required length
Weight	0.25kg

Led Chip Brand	Samsung
CRI (Color Rendering Index)	CRI > 80-91
Warranty	5 Years
IP (Ingress Protection)	IP20
Control Option	On/Off - Dimmable (0–10V / 1–10V) - DALI

BODY FINISH

WHT BLK CHR BRS GLD RAL

BEAM ANGLE

10° 25° 40° 60° 120°

COLOR TEMPERATURE



3000K 3000/4000K 4000K 3000/6500K 6500/4000K 5000K 6500K

IP 20