MERALED
LIGHTING FOR LUXURY

CLOCHE 28



DIMENSIONS

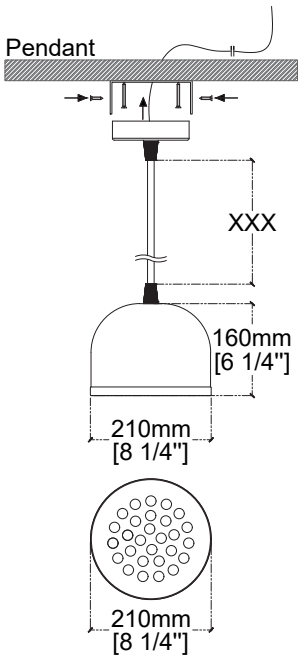

48W POWER

7050 LUMEN OUTPUT

5 YEARS WARRANTY

TECHNICAL DATA

Body Material	Aluminium
Dimensions	Ø210mm
Cut Out	Pendant-mounted
Product Height	H: 160mm
Weight	4kg

Led Chip Brand	CREE-USA
CRI (Color Rendering Index)	CRI > 80-90
Warranty	5 Years
IP (Ingress Protection)	IP20
Control Option	On/Off - Dimmable (0–10V / 1–10V) - DALI - Tunable White

BODY FINISH



BEAM ANGLE



COLOR TEMPERATURE

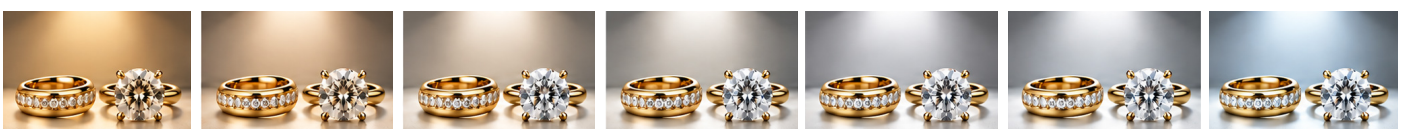

IP 20