MERALED
LIGHTING FOR LUXURY

QUADRA 28 S

EXCLUSIVE SERIES

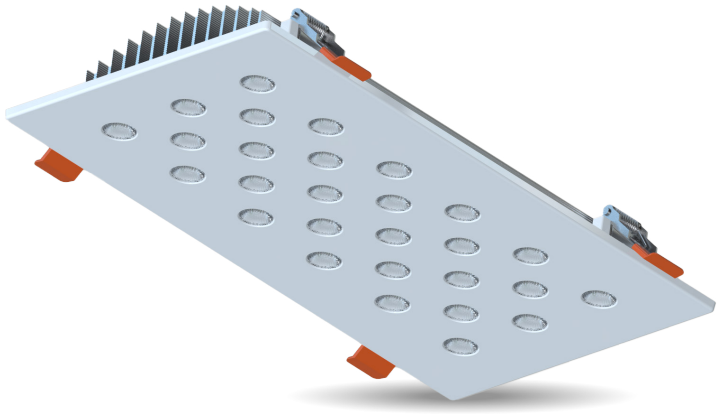

DIMENSIONS

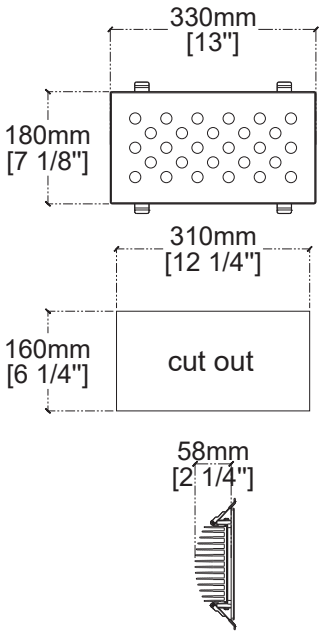

65W POWER

9100 LUMEN OUTPUT

5 YEARS WARRANTY

TECHNICAL DATA

Body Material	Aluminium
Dimensions	330 x 180 mm
Cut Out	310 x 160 mm
Product Height	H: 58mm
Weight	1.75kg

Led Chip Brand	CREE-USA
CRI (Color Rendering Index)	CRI > 80-90
Warranty	5 Years
IP (Ingress Protection)	IP20
Control Option	On/Off - Dimmable (0–10V / 1–10V) - DALI - Tunable White

BODY FINISH

WHT BLK CHR BRS GLD RAL

BEAM ANGLE

10° 25° 40° 60° 120°

COLOR TEMPERATURE

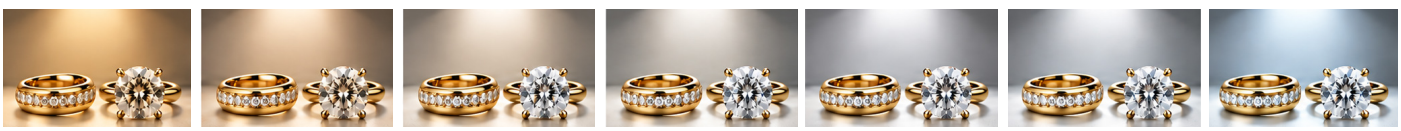

3000K 3000/4000K 4000K 3000/6500K 6500/4000K 5000K 6500K