MERALED
LIGHTING FOR LUXURY

QUADRA 11

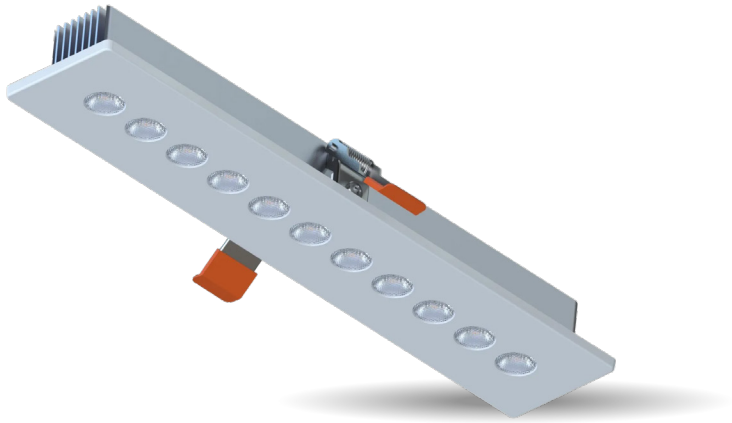

DIMENSIONS

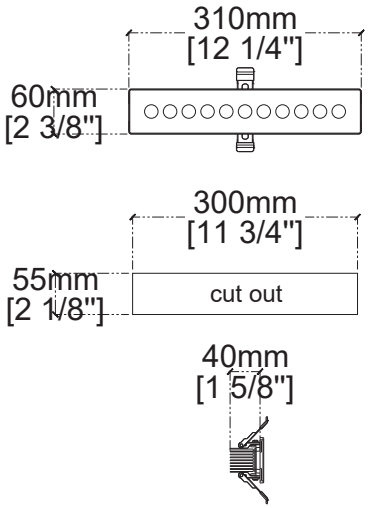

19W POWER

2774 LUMEN OUTPUT

5 YEARS WARRANTY

TECHNICAL DATA

Body Material	Aluminium
Dimensions	310 x 60 mm
Cut Out	300 x 55 mm
Product Height	H: 40mm
Weight	0.7kg

Led Chip Brand	CREE-USA
CRI (Color Rendering Index)	CRI > 80-90
Warranty	5 Years
IP (Ingress Protection)	IP20
Control Option	On/Off - Dimmable (0–10V / 1–10V) - DALI - Tunable White

BODY FINISH

WHT BLK CHR BRS GLD RAL

BEAM ANGLE

10° 25° 40° 60° 120°

COLOR TEMPERATURE

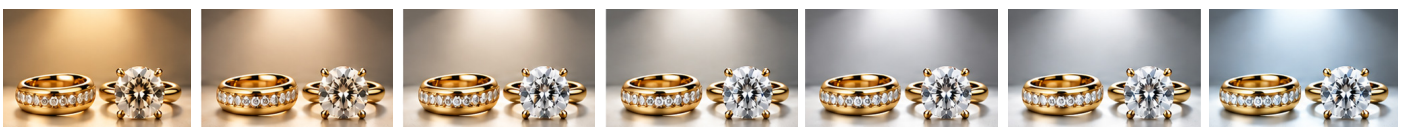

3000K | 3000/4000K | 4000K | 3000/6500K | 6500/4000K | 5000K | 6500K

IP 20