MERALED
LIGHTING FOR LUXURY

MON SERIES

# MONOLIGHT



## DIMENSIONS

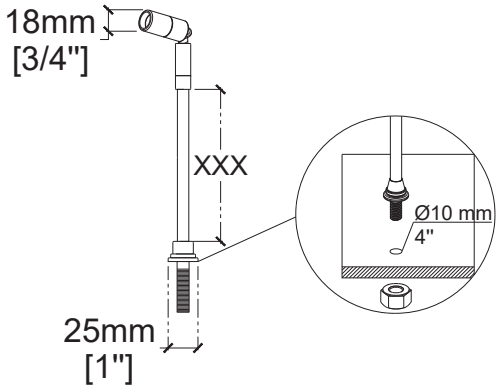


**3W** POWER

**420** LUMEN OUTPUT

**5** YEARS WARRANTY

## TECHNICAL DATA

| | |
|---|---|
| Body Material | Aluminium |
| Dimensions | Ø18 mm |
| Cut Out | Ø10 mm |
| Product Height | H: Any required length |
| Weight | 0.25kg |

| | |
|---|---|
| Led Chip Brand | CREE-USA |
| CRI (Color Rendering Index) | CRI > 80-90 |
| Warranty | 5 Years |
| IP (Ingress Protection) | IP20 |
| Control Option | On/Off - Dimmable (0–10V / 1–10V) - DALI |

## BODY FINISH

WHT BLK CHR BRS GLD RAL

## BEAM ANGLE

10° 25° 40° 60° 120°

## COLOR TEMPERATURE



3000K 3000/4000K 4000K 3000/6500K 6500/4000K 5000K 6500K

IP 20