MERALED
LIGHTING FOR LUXURY

TRACK LIGHT SERIES

MILA TRACK LIGHT

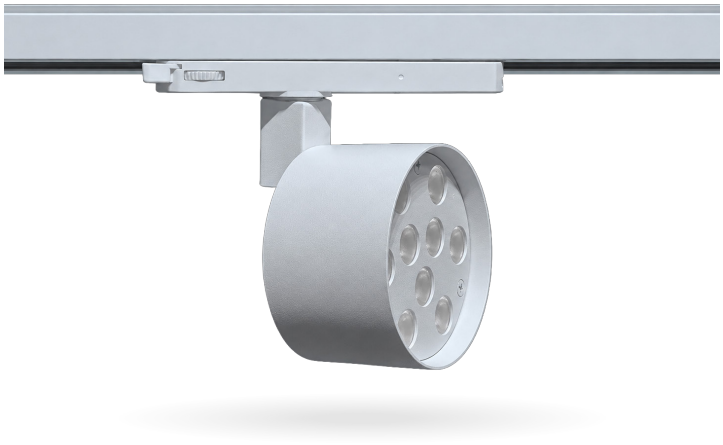

DIMENSIONS

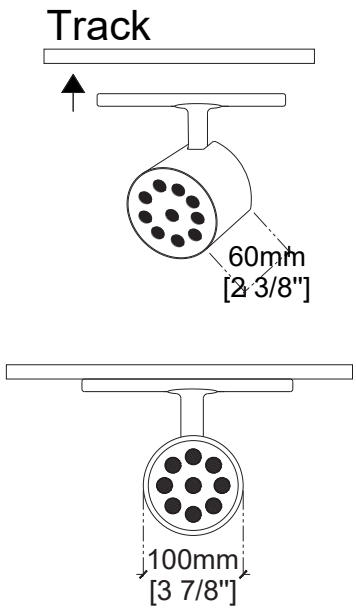

28W POWER

4050 LUMEN OUTPUT

5 YEARS WARRANTY

TECHNICAL DATA

Body Material	Aluminium
Dimensions	Ø100 mm
Cut Out	Track-mounted
Product Height	H: 60mm
Weight	0.8kg

Led Chip Brand	CREE-USA
CRI (Color Rendering Index)	CRI > 80-90
Warranty	5 Years
IP (Ingress Protection)	IP20
Control Option	On/Off - Dimmable (0–10V / 1–10V) - DALI

BODY FINISH

WHT BLK CHR BRS GLD RAL

BEAM ANGLE

10° 25° 40° 60° 120°

COLOR TEMPERATURE

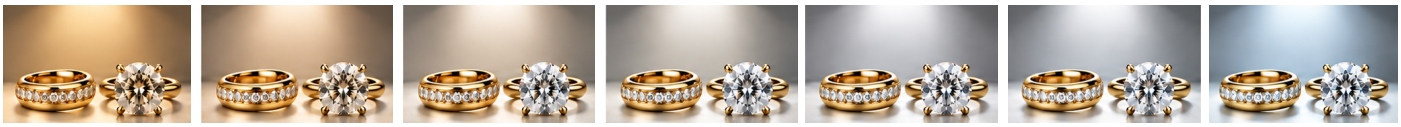

3000K 3000/4000K 4000K 3000/6500K 6500/4000K 5000K 6500K

IP 20