MERALED
LIGHTING FOR LUXURY

SILVA SERIES

SILVA 2

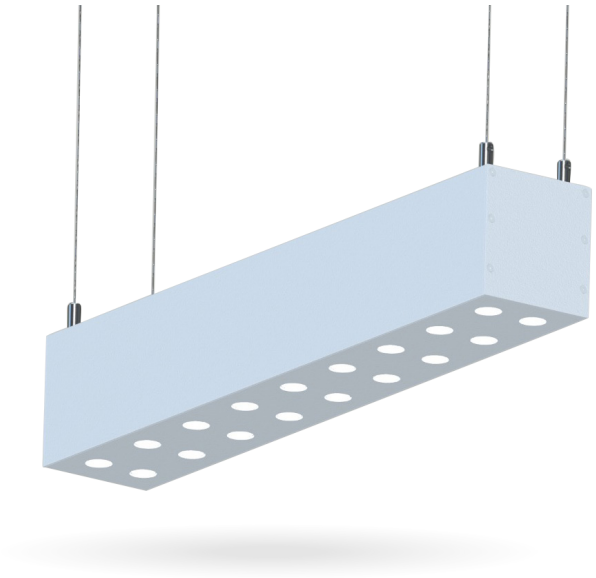

DIMENSIONS

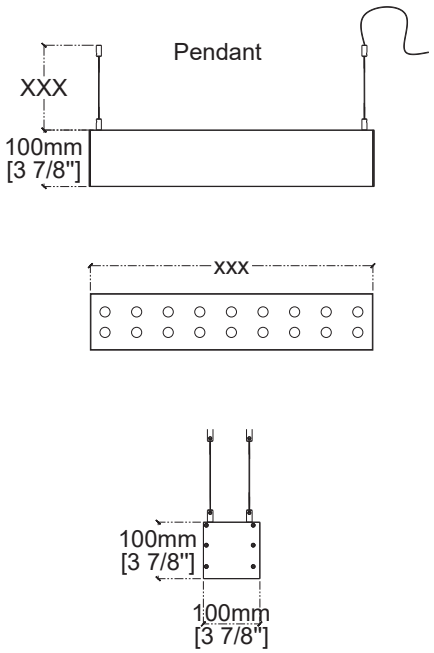

70W/mt
POWER

10220
LUMEN OUTPUT

5
YEARS WARRANTY

TECHNICAL DATA

Body Material	Aluminium
Dimensions	100mm x Any required length
Cut Out	Pendant-mounted
Product Height	H: 100mm
Weight	5,5kg/m

Led Chip Brand	CREE-USA
CRI (Color Rendering Index)	CRI > 80-90
Warranty	5 Years
IP (Ingress Protection)	IP20
Control Option	On/Off - Dimmable (0–10V / 1–10V) - DALI - Tunable White

BODY FINISH

WHT BLK CHR BRS GLD RAL

BEAM ANGLE

10° 25° 40° 60° 120°

COLOR TEMPERATURE

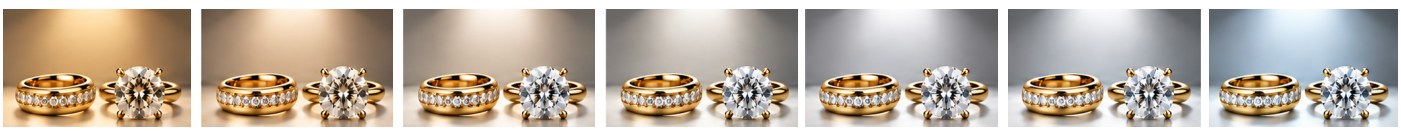

3000K | 3000/4000K | 4000K | 3000/6500K | 6500/4000K | 5000K | 6500K

IP 20